HAIDLMAIR
FOR HIGHER PRODUCTIVITY

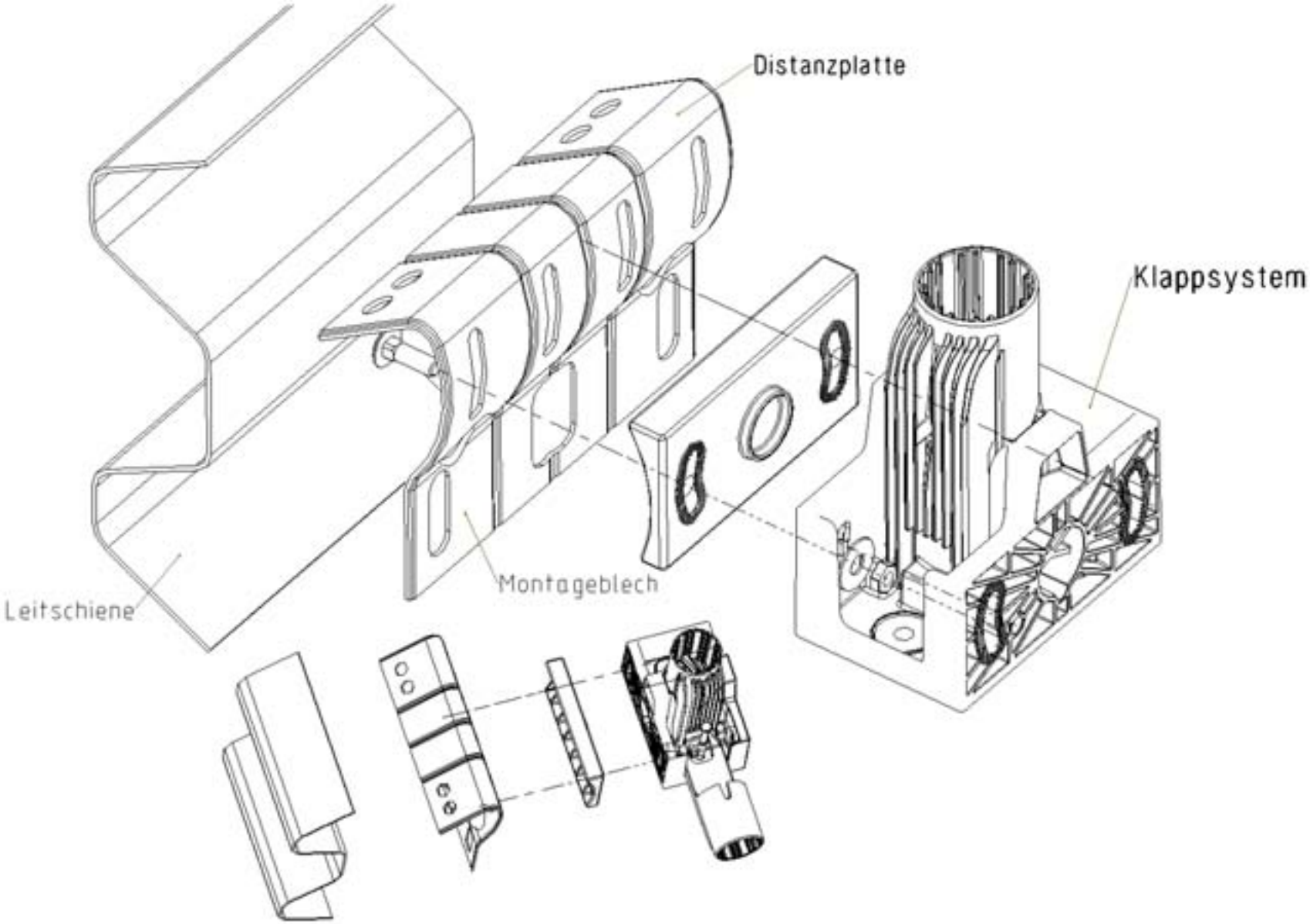

FOR HIGHER PRODUCTIVITY